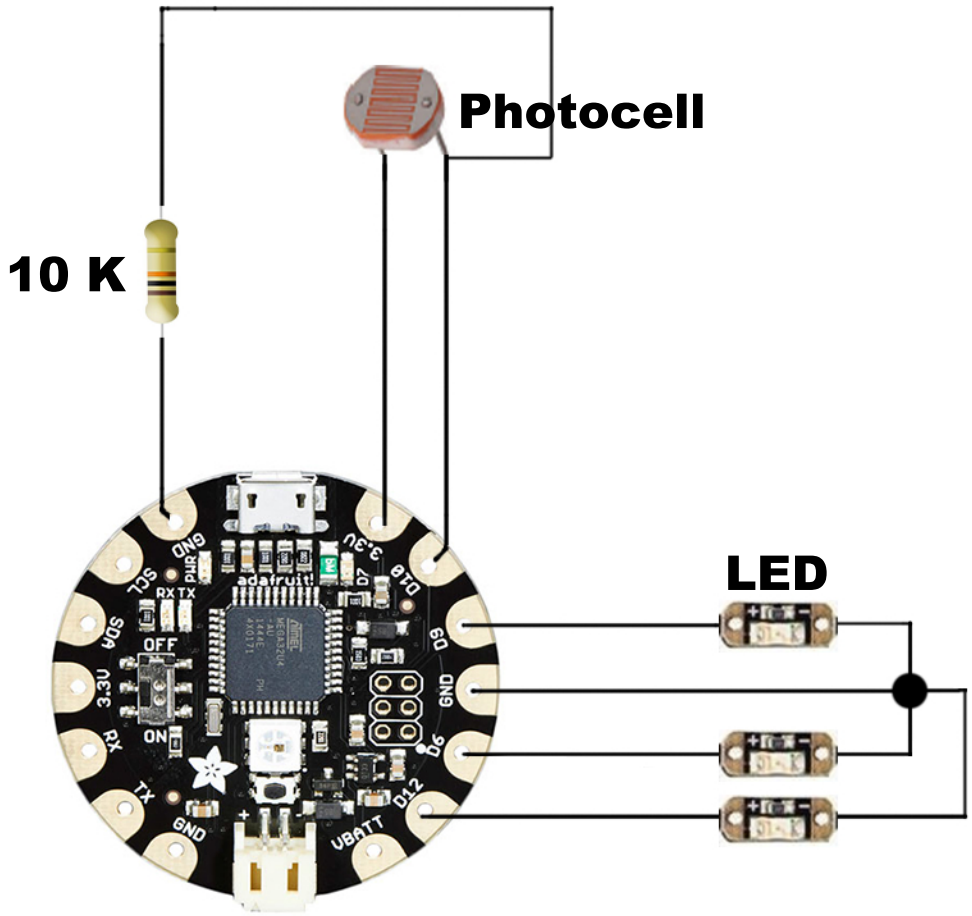FLORA: Photocell and 3 LEDs